Kien Le
Lab Report
ECE2031 L09
19 February 2026

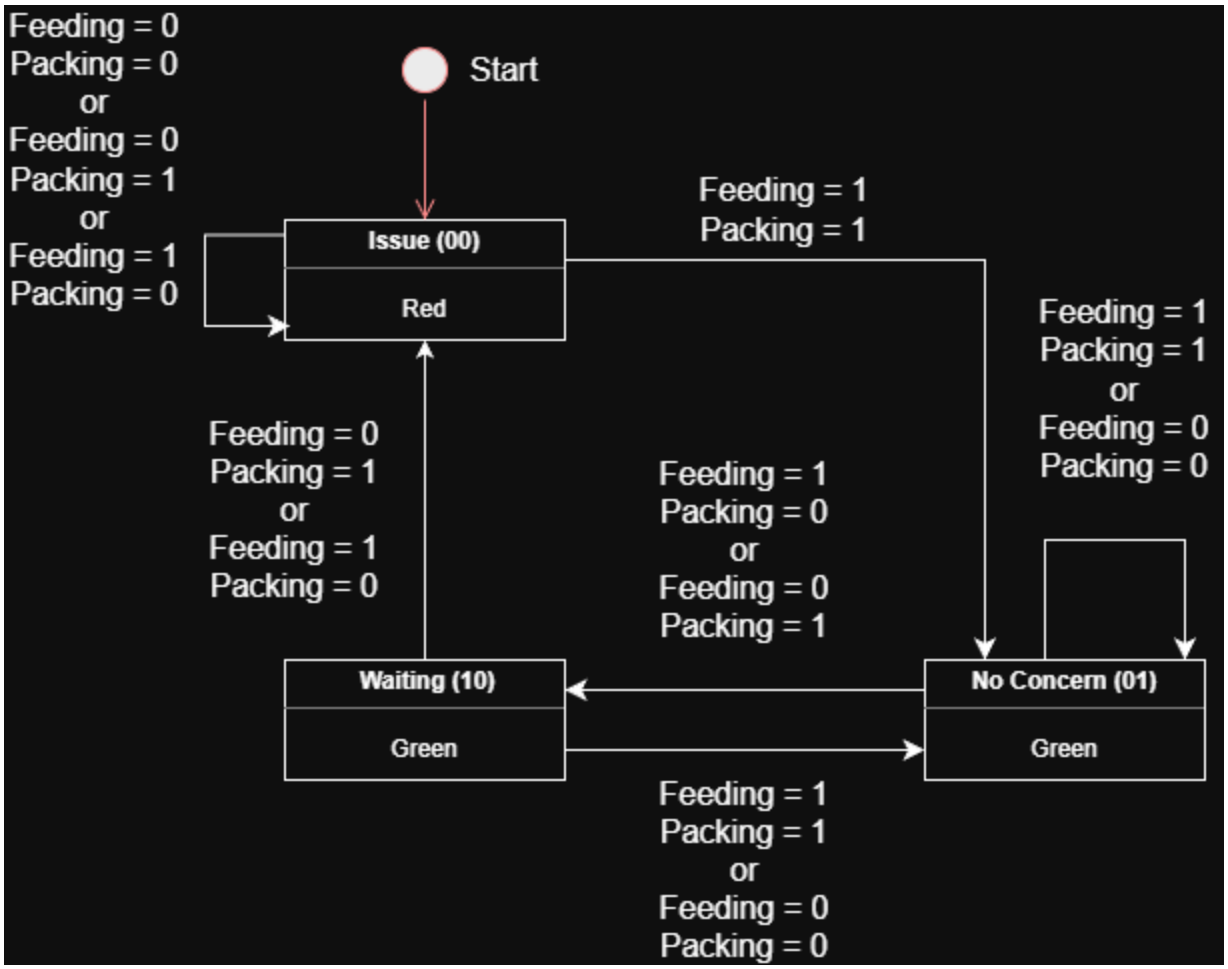


**Figure 1.** UML diagram illustrating how the feeding and packing inputs determine the next state.

| Current State | Q1 | Q0 | feed ing | pack ing | Next State | Q1+ | Q0+ | grn | red |
|---|---|---|---|---|---|---|---|---|---|
| Issue | 0 | 0 | 0 | 0 | Issue | 0 | 0 | 0 | 1 |
| Issue | 0 | 0 | 0 | 1 | Issue | 0 | 0 | 0 | 1 |
| Issue | 0 | 0 | 1 | 0 | Issue | 0 | 0 | 0 | 1 |
| Issue | 0 | 0 | 1 | 1 | No Concern | 0 | 1 | 0 | 1 |
| No Concern | 0 | 1 | 0 | 0 | Waiting | 1 | 0 | 1 | 0 |
| No Concern | 0 | 1 | 0 | 1 | No Concern | 0 | 1 | 1 | 0 |
| No Concern | 0 | 1 | 1 | 0 | Waiting | 1 | 0 | 1 | 0 |
| No Concern | 0 | 1 | 1 | 1 | No Concern | 0 | 1 | 1 | 0 |
| Waiting | 1 | 0 | 0 | 0 | No Concern | 0 | 1 | 1 | 0 |
| Waiting | 1 | 0 | 0 | 1 | Issue | 0 | 0 | 1 | 0 |
| Waiting | 1 | 0 | 1 | 0 | Issue | 0 | 0 | 1 | 0 |
| Waiting | 1 | 0 | 1 | 1 | No Concern | 0 | 1 | 1 | 0 |
| unused | 1 | 1 | 0 | 0 | x | x | x | x | x |
| unused | 1 | 1 | 0 | 1 | x | x | x | x | x |
| unused | 1 | 1 | 1 | 0 | x | x | x | x | x |
| unused | 1 | 1 | 1 | 1 | x | x | x | x | x |

**Figure 2.** State transition table visualizing the inputs and their effects on the next state. Outputs based on the current state are highlighted alongside the next states.

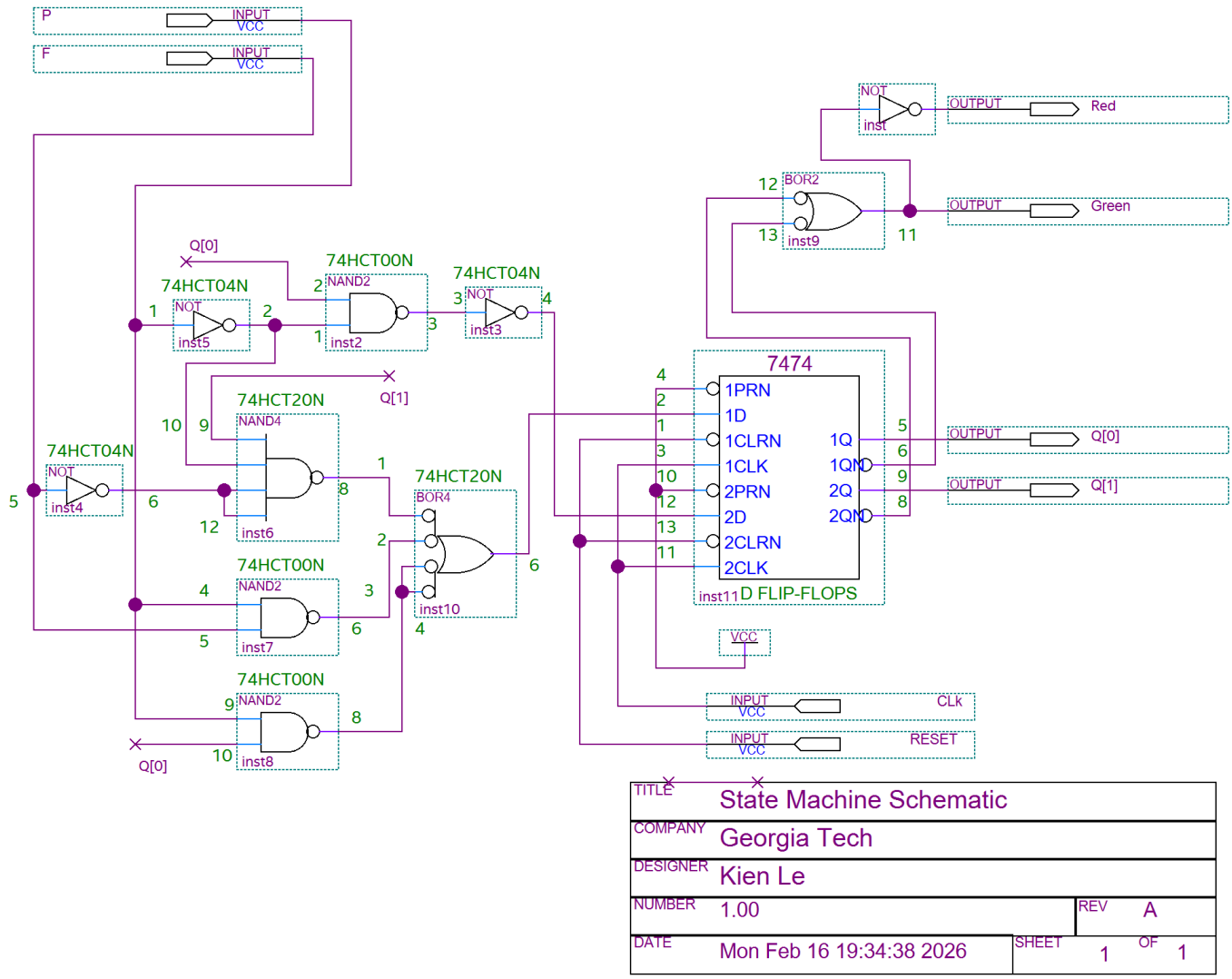


**Figure 3.** Schematic labeled with the corresponding gates, chips, and pin numbers implementing the sum-of-products for the next state bits q[1] & q[0] and the red and green outputs.

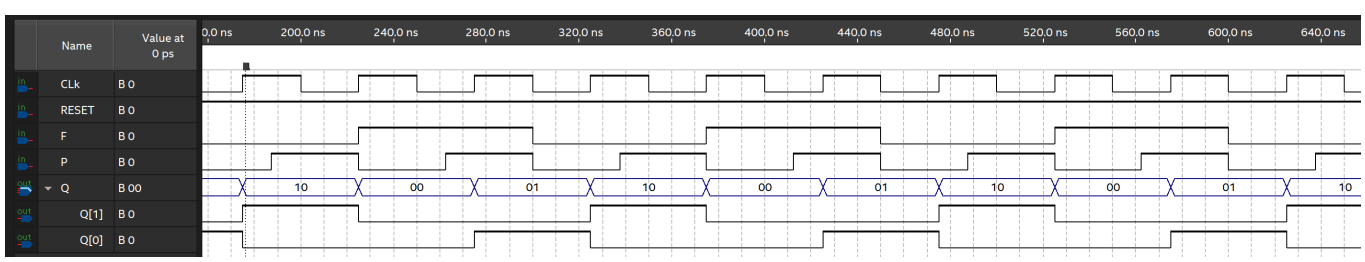


**Figure 4.** Simulation waveform for demonstrating the test cases for the next-state bits. The waveform shows that the state machine does not transition immediately to red, but instead enters a wait stage that is still considered green.

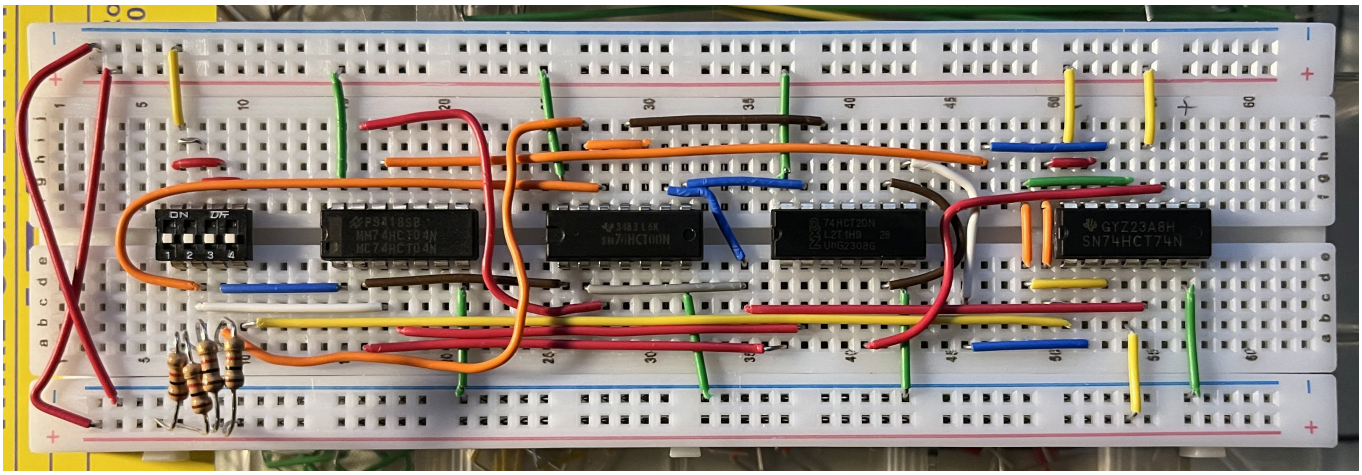

**Figure 5.** Protoboard implementation of the next-state logic expressions, incorporating the D flip flop to the right of the board.

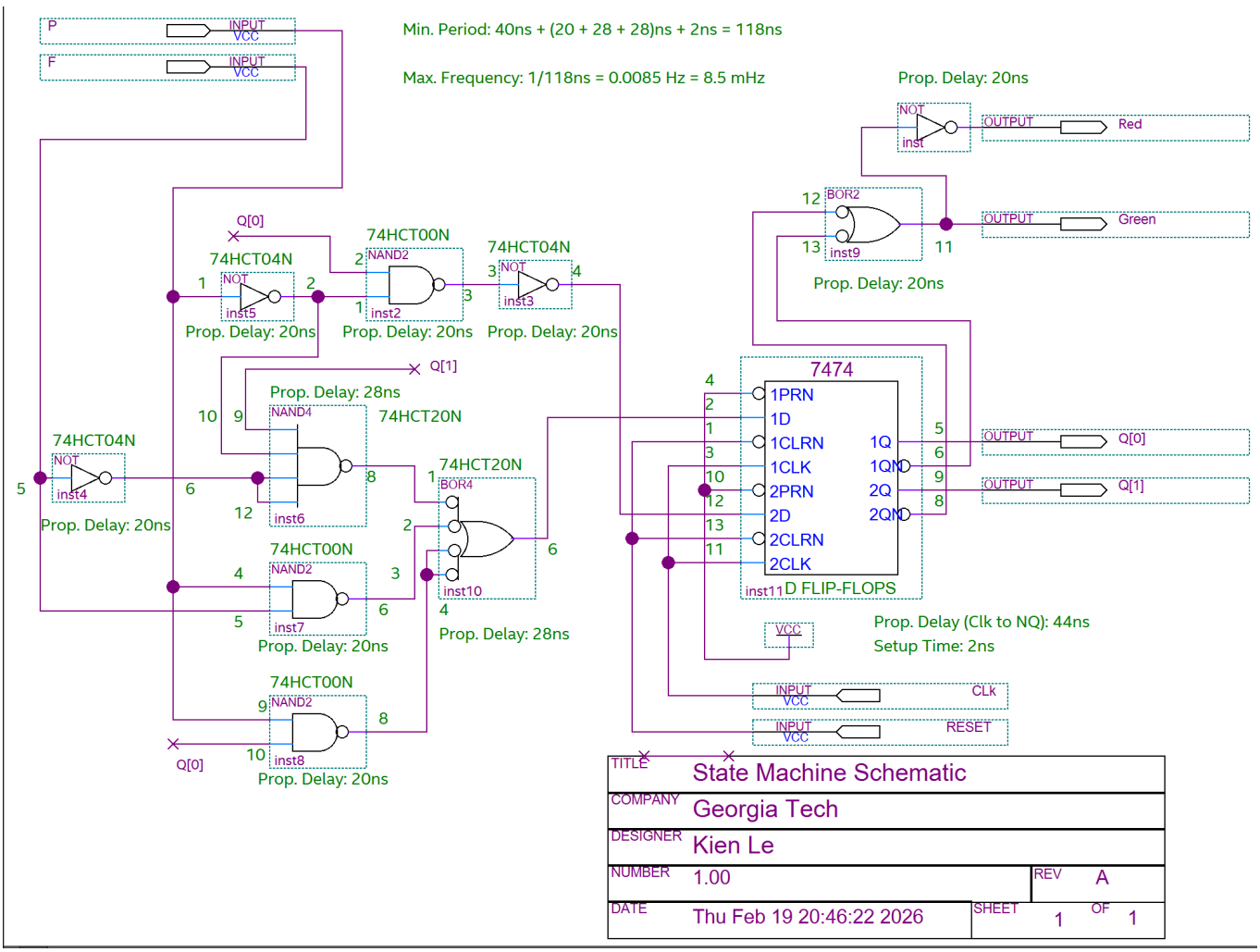


**Figure 6.** Annotated schematic including propagation delays and the D flip-flop setup time. The maximum calculated frequency, determined through the critical path, is around 8.5 MHz.